"Wind Speed Converter" Installation

Software Version 1.02

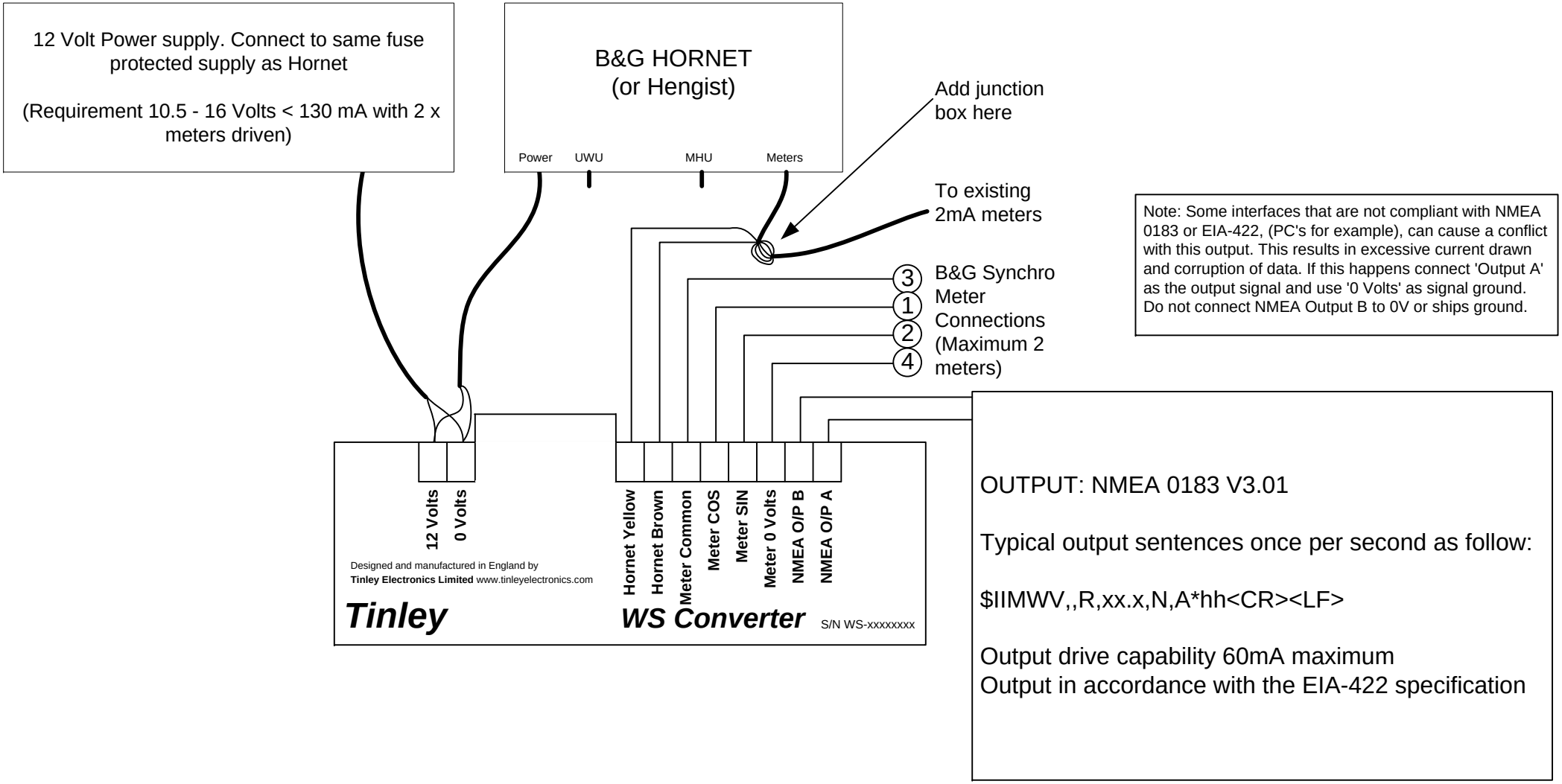

Note: Some interfaces that are not compliant with NMEA 0183 or EIA-422, (PC's for example), can cause a conflict with this output. This results in excessive current drawn and corruption of data. If this happens connect 'Output A' as the output signal and use '0 Volts' as signal ground. Do not connect NMEA Output B to 0V or ships ground.

Tinley Electronics Ltd.
235 Bentley Way,
LYMINGTON, SO41 8JW.
England

© Tinley Electronics Ltd. 2006
This drawing may not be copied or reproduced in any form or by any means without the prior written consent of Tinley Electronics Ltd.

Tel: +44 (0) 1590 610071
Fax: +44 (0) 1590 610072
e-mail: electronics@tinley.net
Website: www.tinleyelectronics.com